EBICO
Burners & Equipment

Notice: All technical parameters and product pictures in this catalog are copyrighted by ebico. Ebico reserves the right to modify any data and text without prior notice.

EBICO
Burners & Equipment

EBICO (CHINA) ENVIRONMENT CO., LTD.

Add: Building No.48, Henghua Sci-tech Park, 58 Xiuxi Road,
Binhu District, Wuxi City, Jiangsu Province, China
Phone: +86-510-85187552 (Pre-sales Consulting)
E-mail: info@ebico.com
Website: www.ebico.com

PRODUCT MANUAL

"Ebico • The Green Way to Burn"

ABOUT EBICO

EBICO originated in Milan, Italy, and the burner business has been the persistence of EBICO for more than 25 years. EBICO has formed a strategic cooperation with the Novar Bergamo and Vizcaya teams with strong international burner research and development capabilities. Optimizing and integrating European cutting-edge combustion technology resources to form EBICO's unique strategic system. EBICO has strategic partners or factories in Italy, Germany, Switzerland, the Netherlands, China and other countries, so EBICO has decades of expertise in the design, research and development, market service and resource optimization of large burners, fuel supply systems, and automatic control systems. experience. EBICO's research focuses on large-scale ultra-low nitrogen industrial burners, burners with non-standard combustion requirements and some combustion equipment with high precision requirements.

EBICO can supply standard and non-standard burners. The scientific application of the patented separation technology determines that EBICO burners can adapt to very harsh environments. EBICO fully meets the working conditions of boilers, power plants, industrial boilers, heat transfer oil boilers, drying drums of asphalt mixing buildings and asphalt heating heat transfer oil furnaces. Advanced and unique design concepts have won many markets for EBICO burners, such as low-nitrogen emission burners and intelligent control that meet European CLASS I, CALSS II, and CALSS III standards in advance. EBICO burners provide customers with the most reliable products and services, while enabling a variety of fuel efficient and saving configurations. Numerous burners are currently operating efficiently at project sites around the world.

EBICO burner has a high-tech R&D professional team, the team can analyze the requirements of customers, formulate the best design scheme and manufacturing system in the communication with customers, and fully meet the specific requirements and expectations of users. The most important thing is that EBICO can provide customers with qualified and fast support services.

Choosing an EBICO burner means having experienced project partners with the same needs in the same industry, which enables users to rationally allocate economic resources and production resources to the maximum extent under the premise of fully considering ecological and environmental issues.

EBICO can provide various types of burners with a power range of 85kw-93000kw; specifically: conventional fuel burners, non-standard customized burners, low nitrogen burners, pulverized coal particle burners, multi-fuel burners, low calorific value fuel burners .

Core Technical Support

Strict Manufacturing Process

Excellent Design Team

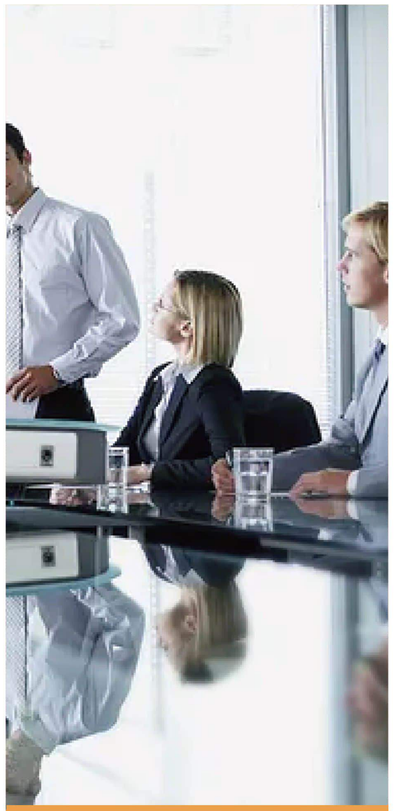

Efficient Operation Team

Outstanding Partners

Senior Industry Identification

EBICO burner products have gone through eight major steps: research, design, test, finished product, certification, feedback, innovation, and guidance.

Safe, energy-saving and environmentally friendly series of products is the goal of EBICO, and EBICO is still continuously improving this harsh requirement.

SAFETY

HIGH ACCURACY/DUAL CORE/STABILITY

ENERGY SAVING

LOW OXYGEN/LOW ENERGY CONSUMPTION/HIGH EFFICIENCY

ENVIRONMENTAL PROTECTION

LOW OXYGEN/LOW CARBON/ LOW NOISE

EBICO burner adheres to the three design concepts of "safety, environmental protection and energy saving", and is designed in combination with the Chinese market environment and the particularity of fuel. EBICO's burner products are scientific and reasonable in design, compact in size, perfect in structure, low in failure rate, high in combustion efficiency, low in energy consumption, and have high levels of rain, dust and explosion protection. Mandatory safety regulations, electronic intelligent proportioning, more convenient operation and adjustment, EBICO burner is an excellent product that can be adapted to heat equipment.

EBICO
Burners & Equipment

Integrated type ES series electronic proportional adjustment low NOx burner

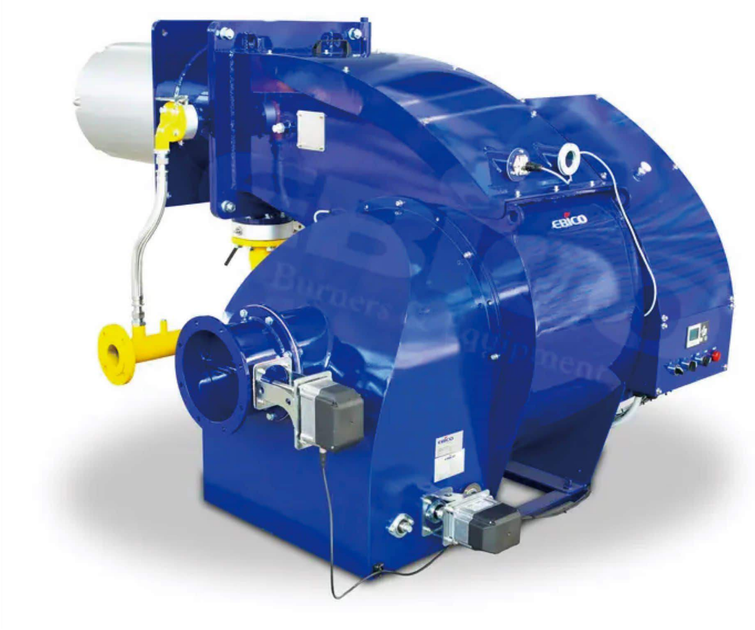

Capacity Range: 110kW-16500kW **Single Burner Adaptation:** 0.5 T/H - 20 T/H Boiler or 100 thousand kCal - 10 million kCal heat conduction oil furnace

Applicable Fuel: natural gas, gas/hydrogen, light oil, heavy oil.

Features: low carbon, low nitrogen, low oxygen, low power consumption, low noise.

Product Technology: D type fuel grading and proportioning combustion technology, central fuel reflux technology, positive and negative oxygen technology, internal cycle technology, external cycle technology

Integrated type ES series electronic proportional control low NOx burner (DIF type) - natural gas - low volume FGR technology

Model	Capacity (kW)	Valve Group Size	Gas Consumption (Nm^3/h)	Motor Power (kW)	NOx Emissions (mg/m^3)
ES70GE	130-780	Rp 1"	13-78	1.5	<30
ES100GE	183-1100	Rp 1 1/2"	18-110	2.2	<30
ES150GE	260-1560	Rp 1 1/2"	26-156	3	<30
ES200GE	425-2552	Rp 2"	42-255	5.5	<30
ES250GE	511-3070	Rp 2"	51-307	7.5	<30
ES300GE	700-4200	Rp 2"/DN65	70-420	11	<30
ES500GE	916-5500	DN65	91-550	15	<30
ES600GE	1325-7950	DN80	132-795	18.5	<30
ES800GE	1583-9500	DN80	158-950	37	<30
ES900GE	1883-11300	DN80	188-1130	37	<30
ES1000GE	2050-12300	DN100	205-1230	45	<30

*The technical parameters are laboratory data, which may vary according to the actual situation.

Working Curve

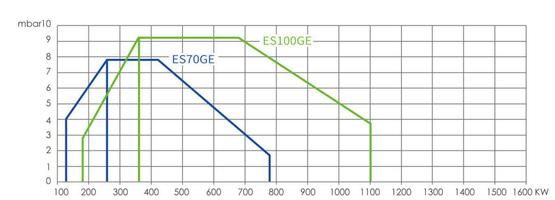

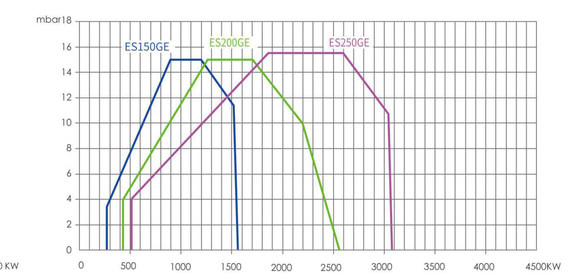

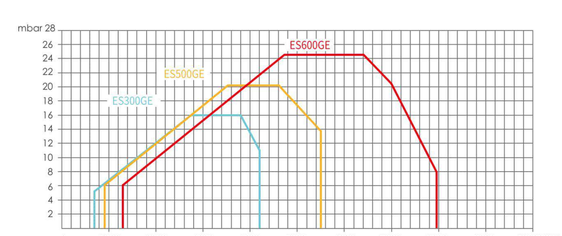

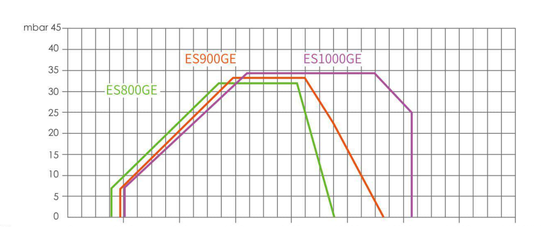

Integrated type ES series electronic proportional control low NOx burner (DIF type) - natural gas - Overall dimensions

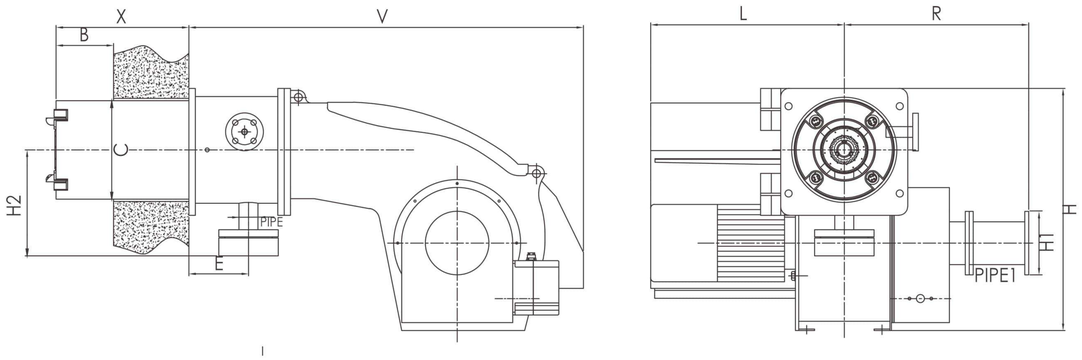

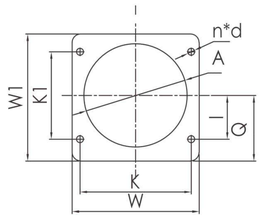

ES70-ES600

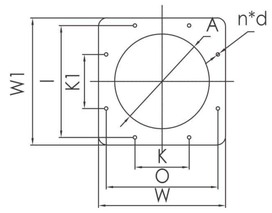

ES800-ES1500

Model	V	X	H2	E	R	L	H	H1	C	K1	K	I	W1	W	O	n*d	A	B	PIPE	PIPE1
ES70GE	994	335	267	150	465	488	610	455	Φ248	220	280	110	320	320	165	4-Φ18	Φ260	150	DN40	DN100
ES100GE	1215	335	267	150	643	511	610	623	Φ248	340	340	170	425	400	200	4-Φ18	Φ260	150	DN40	DN100
ES150GE	1275	455	320	185	643	511	848	623	Φ328	340	340	170	425	400	200	4-Φ18	Φ340	200	DN50	DN125
ES200GE	1290	455	320	185	682	594	848	71 5	Φ328	400	400	190	490	470	235	4-Φ18	Φ340	200	DN50	DN125
ES250GE	1294	505	376	185	682	594	970	715	Φ388	400	400	190	490	470	235	4-Φ18	Φ400	200	DN65	DN150
ES300GE	1520	505	376	184	737	735	970	913	Φ388	440	440	220	500	500	250	4-Φ18	Φ400	200	DN65	DN150
ES500GE	1546	505	395	176	840	640	1163	970	Φ422	506	506	252	582	582	292	4-Φ22	Φ440	200	DN80	DN200
ES600GE	1556	505	445	190	840	640	1260	1001	Φ500	506	506	253	582	582	292	4-Φ22	Φ520	200	DN80	DN250
ES800GE	1562	594	505	300	798	801	1290	1173	Φ527	320	320	660	750	750	660	8-Φ20	Φ550	200	DN100	DN250
ES900GE	1562	600	505	300	918	850	1290	1173	Φ530	320	320	660	750	750	660	8-Φ20	Φ560	200	DN125	DN300
ES1000GE	1562	600	505	300	798	850	1548	1173	Φ530	320	320	660	750	750	660	8-Φ20	Φ560	200	DN125	DN300

*Dimensions are available in both standard and extended sizes. The dimensions shown in the picture are for reference only. EBICO reserves the right to modify them without prior notice to the customer.

Integrated type ES series electronic proportional control low NOx burner (DIF type) - natural gas/ Light oil - low volume FGR technology

Model	Capacity (kW)	Valve Group Size	Fuel Consumption (kg/h)	Gas Consumption (Nm^3/h)	Motor Power (kW)	Pump Power (kW)	NOx Emissions (Gaseous Fuels) (mg/m^3)	NOx Emissions (Fuel Oil) (mg/m^3)
ES70GGE	130-780	Rp 1"	17-66	13-78	1.5	0.75	<30	<150
ES100GGE	183-1100	RP1 1/2"	23-95	18-110	2.2	0.75	<30	<150
ES150GGE	260-1560	RP1 1/2"	33-132	26-156	3	0.75	<30	<150
ES200GGE	425-2552	RP2"	53-215	42-255	5.5	1.1	<30	<150
ES250GGE	511-3070	RP2"	65-260	51-307	7.5	1.1	<30	<150
ES300GGE	700-4200	RP2"/DN65	89-355	70-420	11	1.5	<30	<150
ES500GGE	916-5500	DN65	116-465	91-550	15	2.2	<30	<150
ES600GGE	1325-7950	DN80	168-670	132-795	18.5	4	<30	<150
ES800GGE	1583-9500	DN80	200-800	158-950	37	4	<30	<150
ES900GGE	1883-11300	DN80	225-900	188-1130	37	4	<30	<150
ES1000GGE	2050-12300	DN100	259-1000	205-1230	45	4	<30	<150

*The technical parameters are laboratory data, which may vary according to the actual situation.

Working Curve

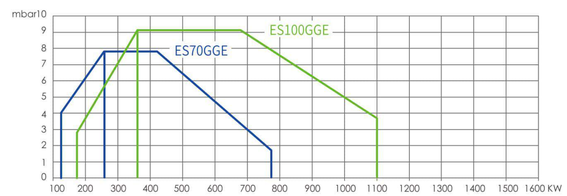

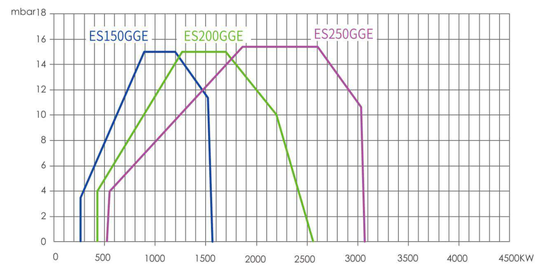

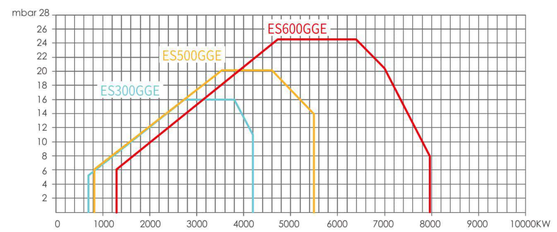

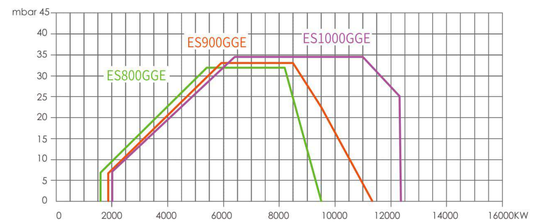

Integrated type ES series electronic proportional control low NOx burner (DIF type) - natural gas/light oil - Overall dimensions

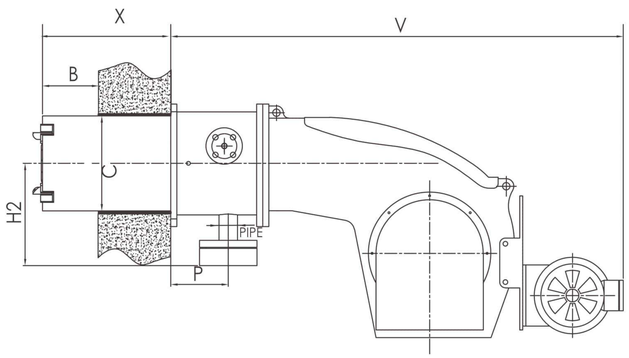

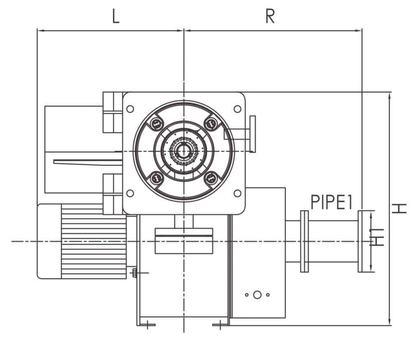

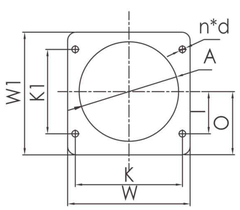

ES70-ES600

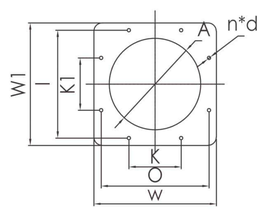

ES800-ES1500

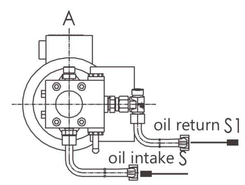

Model	V	X	H2	P	R	L	H	H1	C	K1	K	I	W1	W	O	n*d	A	B	PIPE	PIPE1	S1	S
ES70GGE	1461	335	267	150	465	511	610	455	Φ248	220	280	110	320	320	165	4-Φ18	Φ260	150	DN40	DN100	G3/8"	G3/8"
ES100GGE	1461	335	267	150	643	511	610	623	Φ248	340	340	170	425	400	200	4-Φ18	Φ260	150	DN40	DN100	G3/4"	G3/4"
ES150GGE	1521	455	320	185	643	511	848	623	Φ328	340	340	170	425	400	200	4-Φ18	Φ340	200	DN50	DN125	G3/4"	G3/4"
ES200GGE	1521	455	320	185	682	594	848	715	Φ328	400	400	190	490	470	235	4-Φ18	Φ340	200	DN50	DN125	G3/4"	G3/4"
ES250GGE	1625	505	376	185	682	594	970	715	Φ388	400	400	190	490	470	235	4-Φ18	Φ400	200	DN65	DN150	G3/4"	G3/4"
ES300GGE	1830	505	376	184	737	735	970	913	Φ388	440	440	220	500	500	250	4-Φ18	Φ400	200	DN65	DN150	G3/4"	G3/4"
ES500GGE	1905	505	395	176	840	640	1163	970	Φ422	506	506	252	582	582	292	4-Φ22	Φ440	200	DN80	DN200	G1"	G1"
ES600GGE	1945	505	445	190	840	640	1260	1001	Φ500	506	506	253	582	582	292	4-Φ22	Φ520	200	DN80	DN250	G1"	G1"
ES800GGE	1880	594	505	300	798	801	1290	1173	Φ527	320	320	660	750	750	660	8-Φ20	Φ550	200	DN100	DN250	G1"	G1"
ES900GGE	1880	600	505	300	918	850	1290	1173	Φ530	320	320	660	750	750	660	8-Φ20	Φ560	200	DN125	DN300	G1"	G1"
ES1000GGE	1880	600	505	300	798	850	1548	1173	Φ530	320	320	660	750	750	660	8-Φ20	Φ560	200	DN125	DN300	G1"	G1"

*Dimensions are available in both standard and extended sizes. The dimensions shown in the picture are for reference only. EBICO reserves the right to modify them without prior notice to the customer.

Integrated type ES series electronic proportional control low NOx burner (D type) - natural gas - Without FGR technology

Model	Capacity (kW)	Valve Group Size	Gas Consumption (Nm^3/h)	Motor Power (kW)	NOx Emissions (mg/m^3)
ES70GE	130-780	Rp 1″	13-78	1.5	<60
ES100GE	183-1100	Rp 1 1/2″	18-110	1.5	<60
ES150GE	260-1560	Rp 1 1/2″	26-156	2.2	<60
ES200GE	425-2552	Rp 2″	42-255	3	<60
ES250GE	511-3070	Rp 2″	51-307	5.5	<60
ES300GE	700-4200	Rp 2″/DN65	70-420	7.5	<60
ES500GE	916-5500	DN65	91-550	11	<60
ES600GE	1325-7950	DN80	132-795	15	<60
ES800GE	1583-9500	DN80	158-950	18.5	<60
ES900GE	1883-11300	DN80	188-1130	22	<60
ES1000GE	2050-12300	DN100	205-1230	37	<60
ES1500GE	2750-16500	DN100	275-1650	45	<60

*The technical parameters are laboratory data, which may vary according to the actual situation.

Working Curve

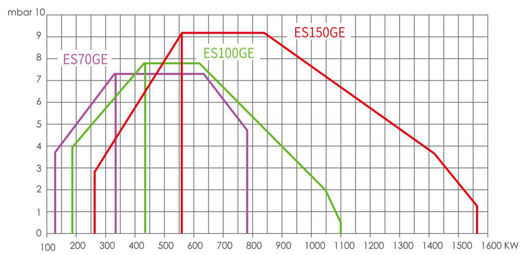

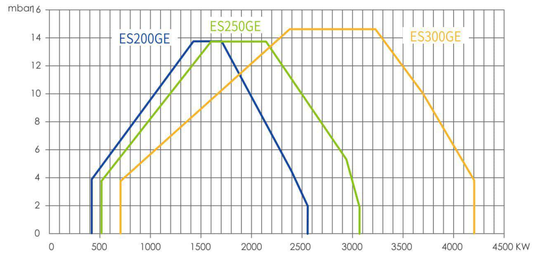

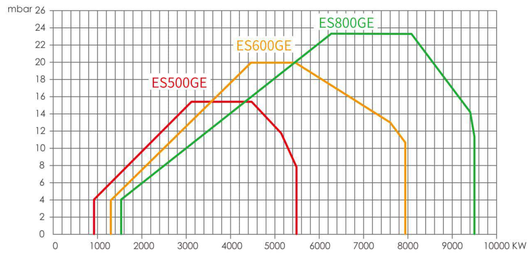

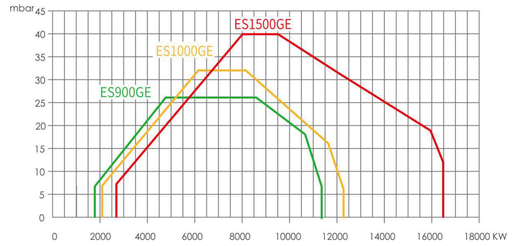

Integrated type ES series electronic proportional control low NOx burner (D type) - natural gas - Overall dimensions

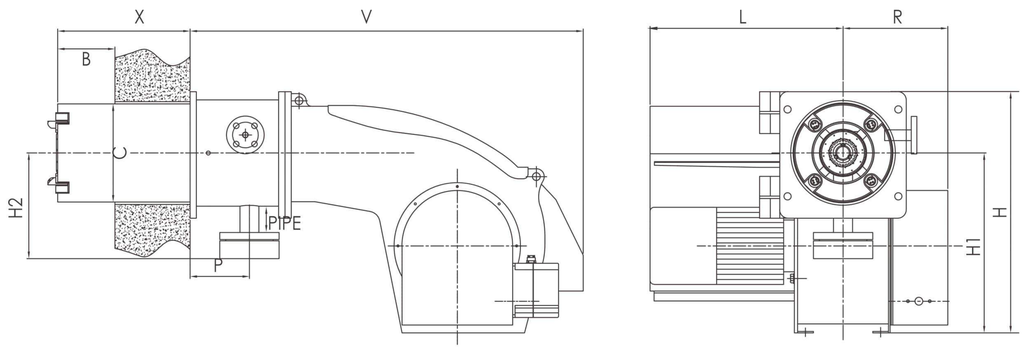

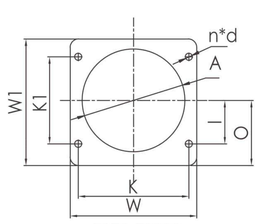

ES70-ES900

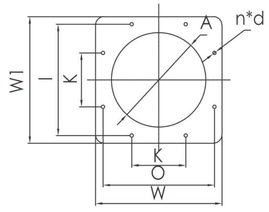

ES1000-ES1500

Model	V	X	H2	P	R	L	H	H1	C	K1	K	I	W1	W	O	n*d	A	B	PIPE
ES70GE	994	335	267	150	265	488	610	455	Φ248	220	280	110	320	320	165	4-Φ18	Φ260	150	DN40
ES100GE	994	335	267	150	265	488	610	455	Φ248	220	280	110	320	320	165	4-Φ18	Φ260	150	DN40
ES1 50GE	1215	335	267	150	443	511	848	623	Φ248	340	340	170	425	400	200	4-Φ18	Φ260	150	DN50
ES200GE	1275	455	320	185	443	511	848	623	Φ328	340	340	170	425	400	200	4-Φ18	Φ340	200	DN50
ES250GE	1275	455	320	185	443	511	970	623	Φ328	400	400	170	425	400	200	4-Φ18	Φ340	200	DN65
ES300GE	1294	505	376	184	482	594	970	715	Φ388	400	400	190	490	470	235	4-Φ18	Φ400	200	DN65
ES500GE	1518	505	370	172	553	735	1163	913	Φ422	440	440	220	500	500	250	4-Φ18	Φ440	200	DN80
ES600GE	1562	505	440	190	640	640	1260	970	Φ500	506	506	252	582	582	291	4-Φ22	Φ520	200	DN80
ES800GE	1562	505	445	190	641	636	1290	1001	Φ500	506	506	252	582	582	291	4-Φ22	Φ520	200	DN100
ES900GE	1562	505	445	190	641	636	1290	1001	Φ500	320	320	252	582	582	291	4-Φ22	Φ520	200	DN100
ES1000GE	1562	600	505	300	598	850	1548	1173	Φ530	320	320	660	750	750	660	8-Φ20	Φ560	200	DN125
ES1500GE	1562	600	505	300	598	850	1548	1173	Φ530	320	320	660	750	750	660	8-Φ20	Φ560	200	DN125

*Dimensions are available in both standard and extended sizes. The dimensions shown in the picture are for reference only. EBICO reserves the right to modify them without prior notice to the customer.

Integrated type ES series electronic proportional control low NOx burner (D type) - natural gas/ Light oil - low volume FGR technology

Model	Capacity (kW)	Valve Group Size	Fuel Consumption (kg/h)	Gas Consumption (Nm^3/h)	Motor Power (kW)	Pump Power (kW)	NOx Emissions (Gaseous Fuels) (mg/m^3)	NOx Emissions (Fuel Oil) (mg/m^3)
ES70GGE	130-780	Rp 1"	17-66	13-78	1.5	0.75	<60	<150
ES100GGE	183-1100	RP1 1/2"	23-95	18-110	1.5	0.75	<60	<150
ES150GGE	260-1560	RP1 1/2"	33-132	26-156	2.2	0.75	<60	<150
ES200GGE	425-2552	RP2"	53-215	42-255	3	1.1	<60	<150
ES250GGE	511-3070	RP2"	65-260	51-307	5.5	1.1	<60	<150
ES300GGE	700-4200	RP2"/DN65	89-355	70-420	7.5	1.5	<60	<150
ES500GGE	916-5500	DN65	116-465	91-550	11	2.2	<60	<150
ES600GGE	1325-7950	DN80	168-670	132-795	15	4	<60	<150
ES800GGE	1583-9500	DN80	200-800	158-950	18.5	4	<60	<150
ES900GGE	1883-11300	DN80	225-900	188-1130	22	4	<60	<150
ES1000GGE	2050-12300	DN100	259-1000	205-1230	37	4	<60	<150
ES1500GGE	2750-16500	DN100	348-1390	275-1650	45	5.5	<60	<150

*The technical parameters are laboratory data, which may vary according to the actual situation.

Working Curve

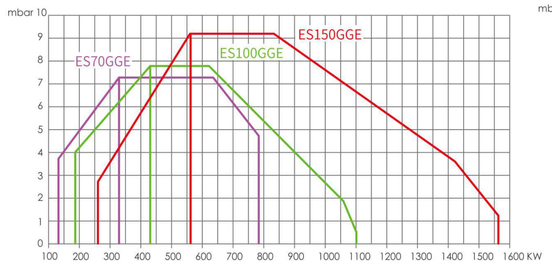

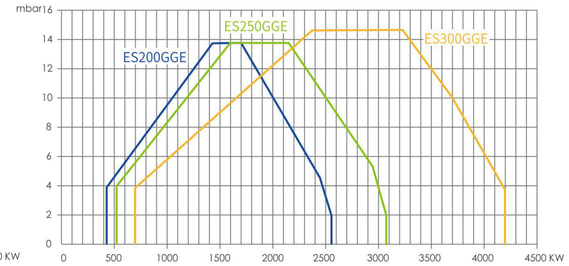

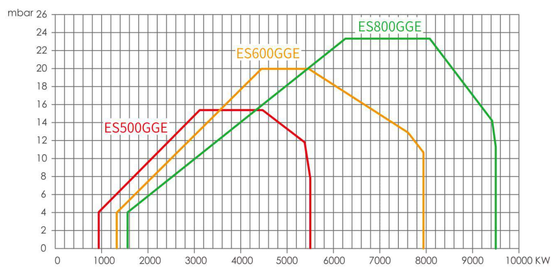

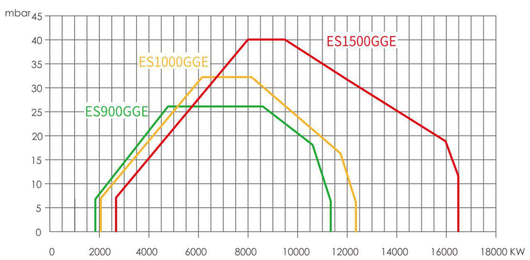

Integrated type ES series electronic proportional control low NOx burner (D type) - natural gas/light oil - Overall dimensions

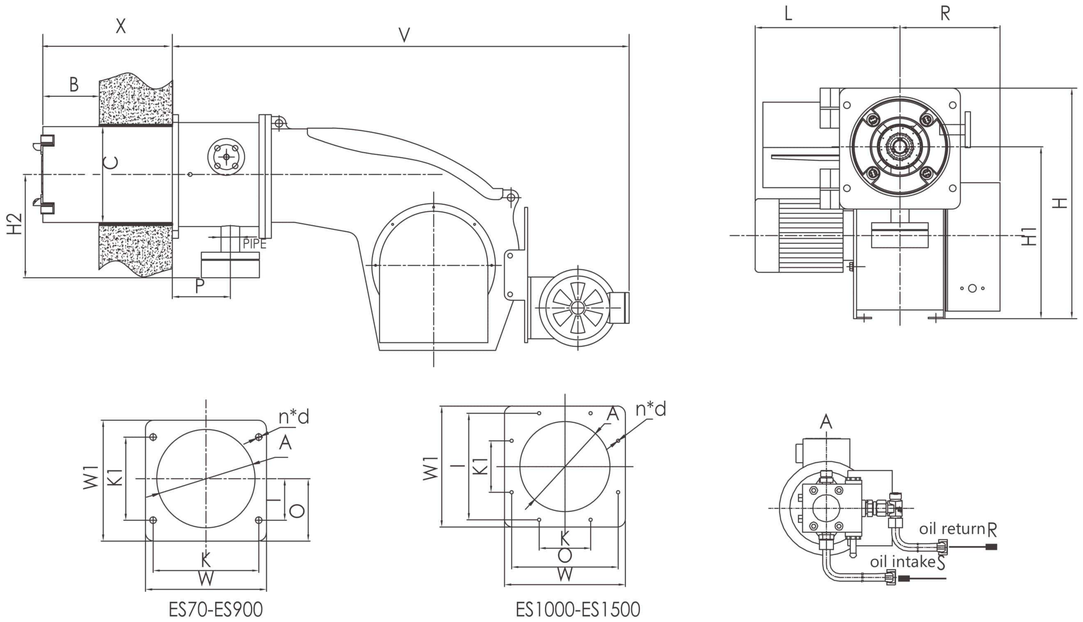

Model	V	X	H2	P	R	L	H	H1	C	K1	K	I	W1	W	O	n*d	A	B	PIPE	S1	S
ES70GGE	1181	335	267	150	265	488	610	455	Φ248	220	280	110	320	320	165	4-Φ18	Φ260	150	DN40	G3/8"	G3/8"
ES100GGE	1181	335	267	150	265	488	610	455	Φ248	220	280	110	320	320	165	4-Φ18	Φ260	150	DN40	G3/8"	G3/8"
ES150GGE	1461	335	267	150	443	511	848	623	Φ248	340	340	170	425	400	200	4-Φ18	Φ260	150	DN50	G3/4"	G3/4"
ES200GGE	1521	455	320	185	443	511	848	623	Φ328	340	340	170	425	400	200	4-Φ18	Φ340	200	DN50	G3/4"	G3/4"
ES250GGE	1521	455	320	185	443	511	970	623	Φ328	400	400	170	425	400	200	4-Φ18	Φ340	200	DN65	G3/4"	G3/4'
ES300GGE	1625	505	376	184	482	594	970	715	Φ388	400	400	190	490	470	235	4-Φ18	Φ400	200	DN65	G3/4"	G3/4"
ES500GGE	1830	505	370	172	553	735	1163	913	Φ422	440	440	220	500	500	250	4-Φ18	Φ440	200	DN80	G3/4"	G3/4"
ES600GGE	1905	505	440	190	640	640	1260	970	Φ500	506	506	252	582	582	292	4-Φ22	Φ520	200	DN80	G1"	G1"
ES800GGE	1945	505	445	190	641	636	1290	1001	Φ500	506	506	252	582	582	292	4-Φ22	Φ520	200	DN100	G1"	G1"
ES900GGE	1880	505	445	190	641	636	1290	1001	Φ500	506	506	252	582	582	292	4-Φ22	Φ520	200	DN100	G1"	G1"
ES1000GGE	1880	600	505	300	598	850	1548	1173	Φ530	320	320	660	750	750	660	8-Φ20	Φ560	200	DN125	G1"	G1"
ES1500GGE	1880	600	505	300	598	850	1548	1173	Φ530	320	320	660	750	750	660	8-Φ20	Φ560	200	DN125	G1"	G1"

*Dimensions are available in both standard and extended sizes. The dimensions shown in the picture are for reference only. EBICO reserves the right to modify them without prior notice to the customer.

Integrated type ES series electronic proportional control burner (Conventional emissions)

Capacity Range: 110kW-16500kW **Single Burner Adaptation:** 0.5 T/H-20 T/H boiler or 100 thousand kCal - 10 million kCal heat conduction oil furnace.

Applicable Fuel: natural gas, light oil, Natural gas / heavy oil.

Features: 5-Low technology (low carbon, low nitrogen, low oxygen, low power consumption, low noise), full electronic intelligence, abstract analog frequency control (optional), combustion efficiency close to 100%, compact streamlined design, low electric power, can resist high furnace back pressure.

Integrated type ES series electronic proportional control burner (Conventional emissions) - Natural Gas

Model	Capacity (kW)	Valve Group Size	Gas Consumption (Nm^3/h)	Motor Power (kW)
ES70GE	130-780	RP1″	13-78	1.5
ES100GE	183-1100	RP1 1/2″	18-110	1.5
ES150GE	260-1560	RP1 1/2″	26-156	2.2
ES200GE	425-2552	RP2″	42-255	3
ES250GE	511-3070	RP2″	51-307	5.5
ES300GE	700-4200	RP2″/DN65	70-420	7.5
ES500GE	916-5500	DN65	91-550	11
ES600GE	1325-7950	DN65	132-795	15
ES800GE	1583-9500	DN80	158-950	18.5
ES900GE	1883-11300	DN80	188-1130	22
ES1000GE	2050-12300	DN100	205-1230	37
ES1500GE	2750-16500	DN100	275-1650	45

*The technical parameters are laboratory data, which may vary according to the actual situation.

Working Curve

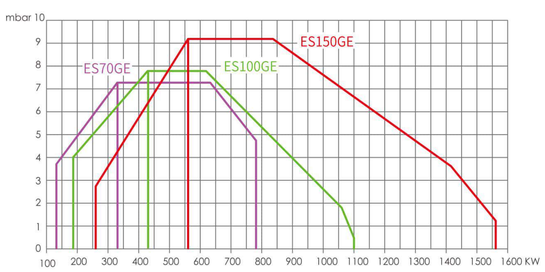

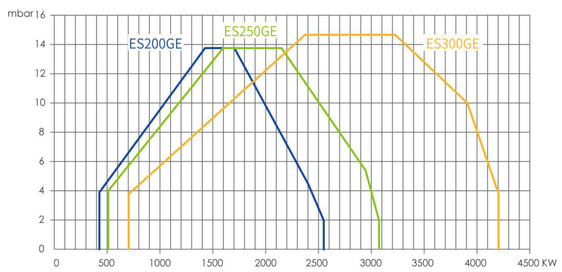

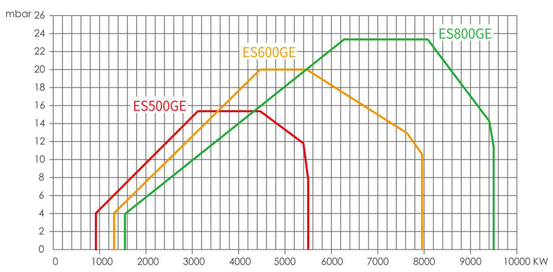

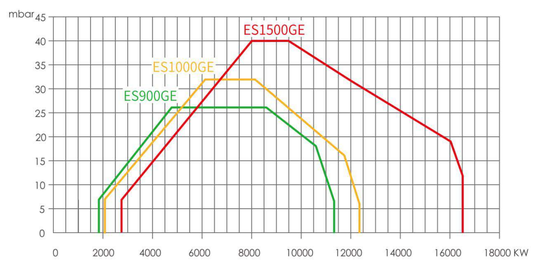

Integrated type ES series electronic proportional control burner (Conventional emissions) - natural gas - Overall dimensions.

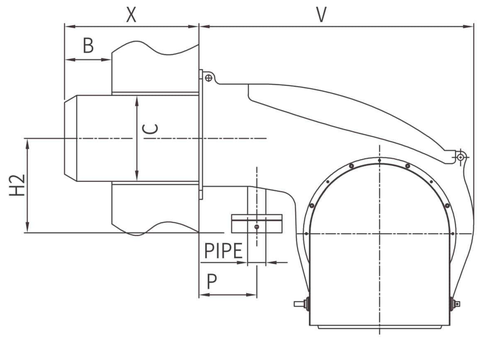

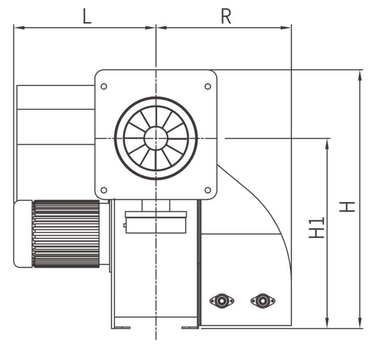

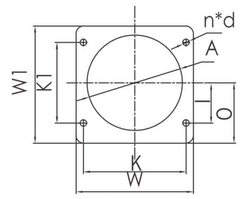

ES70-900GE

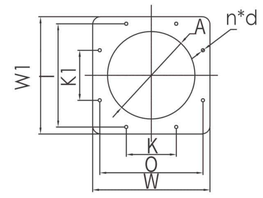

ES1000-1500GE

Model	V	X	H2	P	R	L	H1	B	C	K1	K	I	W1	W	O	n*d	A	PIPE	H
ES70GE	750	335	250	144	265	488	455	150	Φ219	220	280	110	320	320	165	4-Φ18	Φ240	DN40	610
ES100GE	750	335	250	144	265	488	455	150	Φ219	220	280	110	320	320	165	4-Φ18	Φ240	DN40	610
ES150GE	971	445	325	190	443	511	623	200	Φ281	340	340	170	425	400	200	4-Φ18	Φ302	DN50	848
ES200GE	971	445	325	190	443	511	623	200	Φ281	340	340	170	425	400	200	4-Φ18	Φ302	DN50	848
ES250GE	984	500	370	225	482	594	715	200	Φ346	400	400	170	425	400	200	4-Φ18	Φ366	DN65	970
ES300GE	984	500	370	225	482	594	715	200	Φ346	400	400	190	490	470	235	4-Φ18	Φ366	DN65	970
ES500GE	1209	500	370	230	553	735	914	200	Φ346	440	440	220	500	500	250	4-Φ18	Φ366	DN80	1163
ES600GE	1228	500	385	230	640	640	970	200	Φ369	506	506	252	582	582	292	4-Φ22	Φ390	DN80	1260
ES800GE	1222	515	425	230	640	640	1001	200	Φ455	506	506	252	582	582	292	4-Φ22	Φ474	DN100	1290
ES900GE	1222	515	425	230	640	640	1001	200	Φ455	506	506	252	582	582	292	4-Φ22	Φ474	DN100	1290
ES1000GE	1560	600	505	300	598	800	1173	200	Φ495	320	320	660	750	750	660	8-Φ20	Φ540	DN125	1548
ES1500GE	1560	600	505	300	598	850	1173	200	Φ505	320	320	660	750	750	660	8-Φ20	Φ540	DN125	1548

*Dimensions are available in both standard and extended sizes. The dimensions shown in the picture are for reference only. EBICO reserves the right to modify them without prior notice to the customer.

Integrated type ES series electronic proportional control burner (Conventional emissions) - Light oil

Model	Capacity (kW)	Fuel Consumption (kg/h)	Motor Power (kW)	Pump Power (kW)
ES70E	130-780	17-66	1.5	0.75
ES100E	183-1100	23-95	1.5	0.75
ES150E	260-1560	33-132	2.2	0.75
ES200E	425-2552	53-215	3	1.1
ES250E	511-3070	65-260	5.5	1.1
ES300E	700-4200	89-355	7.5	1.5
ES500E	916-5500	116-465	11	2.2
ES600E	1325-7950	168-670	15	4
ES800E	1583-9500	200-800	18.5	4
ES900E	1883-11300	225-900	22	4
ES1000E	2050-12300	259-1000	37	4
ES1500E	2750-16500	348-1390	45	5.5

*The technical parameters are laboratory data, which may vary according to the actual situation.

Working Curve

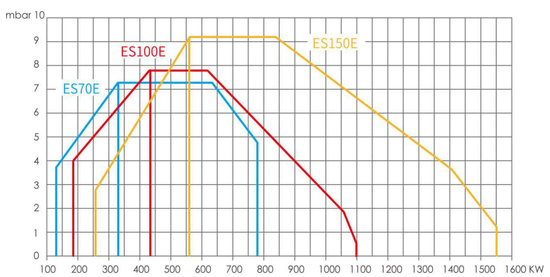

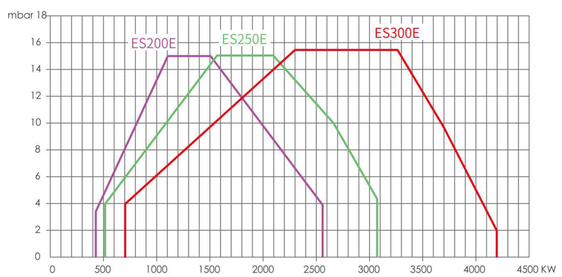

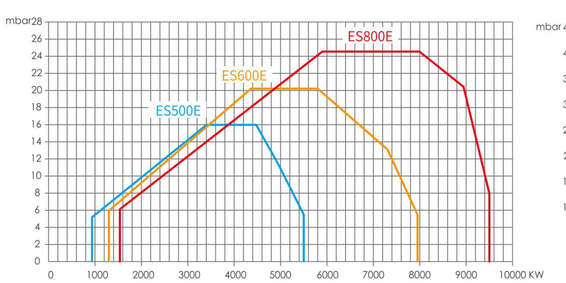

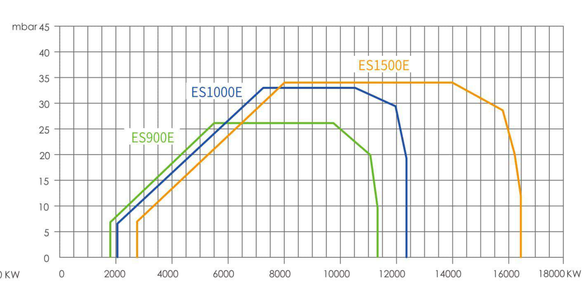

Integrated type ES series electronic proportional control burner (Conventional emissions) - light oil - Overall dimensions.

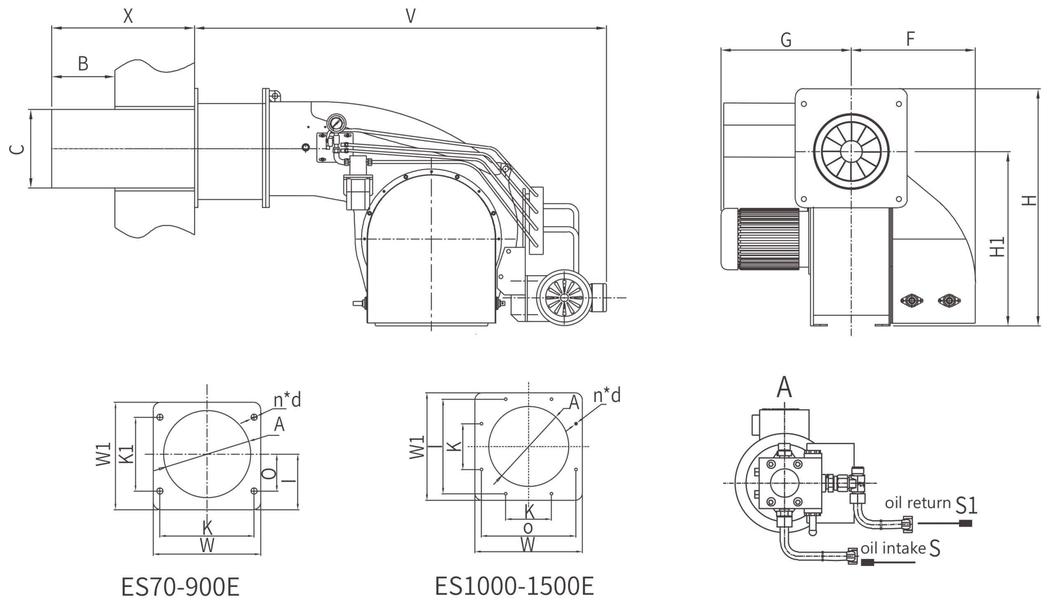

ES70-900E

ES1000-1500E

Model	V	F	G	H1	B	C	K1	K	O	W1	W	I	n*d	A	H	S1	S
ES70E	938	265	383	455	150	Φ219	220	280	110	320	320	165	4-Φ18	Φ240	610	G3/8"	G3/8"
ES100E	938	265	383	455	150	Φ219	220	280	110	320	320	165	4-Φ18	Φ240	610	G3/8"	G3/8"
ES150E	1472	443	465	623	200	Φ281	340	340	170	425	400	200	4-Φ18	Φ302	848	G3/4"	G3/4"
ES200E	1472	443	465	623	200	Φ281	340	340	170	425	400	200	4-Φ18	Φ302	848	G3/4"	G3/4"
ES250E	1615	482	594	715	200	Φ346	400	400	170	425	400	200	4-Φ18	Φ366	970	G3/4"	G3/4"
ES300E	1615	482	594	715	200	Φ346	400	400	190	490	470	235	4-ϕ18	Φ366	970	G3/4"	G3/4"
ES500E	1829	553	735	913	200	Φ346	440	440	220	500	500	250	4-Φ18	Φ366	1163	G3/4"	G3/4"
ES600E	1571	640	640	970	200	Φ369	506	506	252	582	582	292	4-Φ22	Φ390	1260	G1"	G1"
ES800E	1610	641	636	1001	200	Φ455	506	506	252	582	582	292	4-Φ22	Φ474	1291	G1"	G1"
ES900E	1610	641	636	1001	200	Φ455	506	506	252	582	582	292	4-Φ22	Φ474	1291	G1"	G1"
ES1000E	1610	598	800	1173	200	Φ495	320	320	660	750	750	660	8-Φ20	Φ540	1548	G1"	G1"
ES1500E	1610	598	850	1173	200	Φ505	320	320	660	750	750	660	8-Φ20	Φ540	1548	G1"	G1"

*Dimensions are available in both standard and extended sizes. The dimensions shown in the picture are for reference only. EBICO reserves the right to modify them without prior notice to the customer.

Integrated type ES series electronic proportional control burner (Conventional emissions) - Natural Gas/Light oil

Model	Capacity (kW)	Valve Group Size	Fuel Consumption (kg/h)	Gas Consumption (Nm^3/h)	Motor Power (kW)	Pump Power (kW)
ES70GGE	130-780	Rp 1″	17-66	13-78	1.5	0.75
ES100GGE	183-1100	Rp 1 1/2″	23-95	18-110	1.5	0.75
ES150GGE	260-1560	Rp 1 1/2″	33-132	26-156	2.2	0.75
ES200GGE	425-2552	Rp 2″	53-215	42-255	3	1.1
ES250GGE	511-3070	Rp 2″	65-260	51-307	5.5	1.1
ES300GGE	700-4200	Rp 2″/DN65	89-355	70-420	7.5	1.5
ES500GGE	916-5500	DN65	116-465	91-550	11	2.2
ES600GGE	1325-7950	DN80	168-670	132-795	15	4
ES800GGE	1583-9500	DN80	200-800	158-950	18.5	4
ES900GGE	1883-11300	DN80	225-900	188-1130	22	4
ES1000GGE	2050-12300	DN100	259-1000	205-1230	37	4
ES1500GGE	2750-16500	DN100	348-1390	275-1650	45	5.5

*The technical parameters are laboratory data, which may vary according to the actual situation.

Working Curve

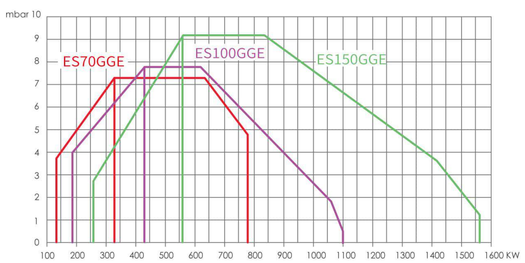

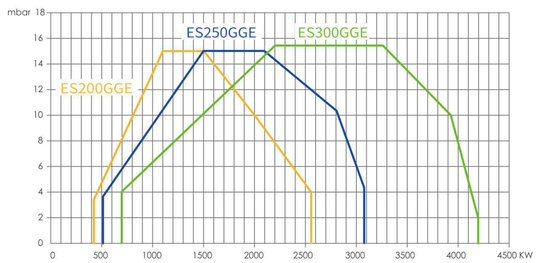

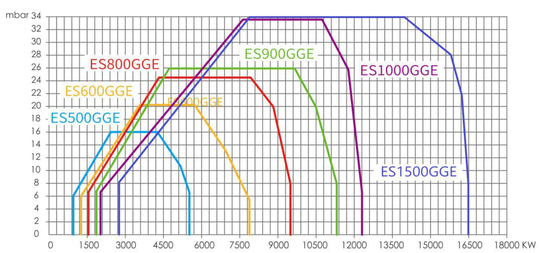

Integrated type ES series electronic proportional control burner (Conventional emissions) - natural gas /light oil - Overall dimensions.

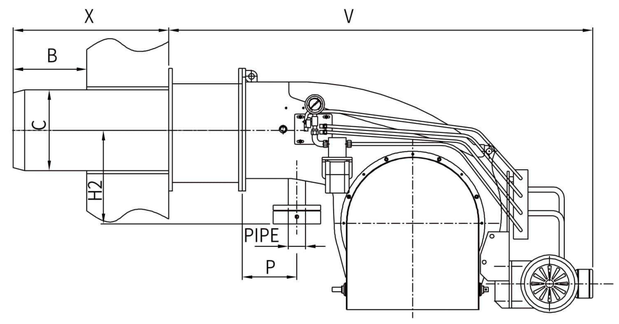

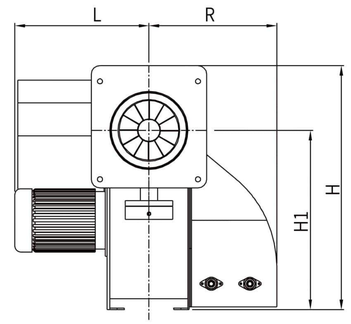

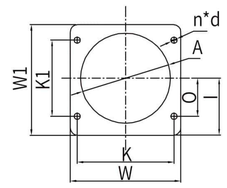

ES70-900GGE

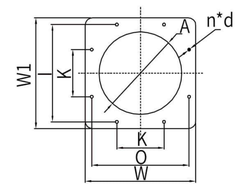

ES1000-1500GGE

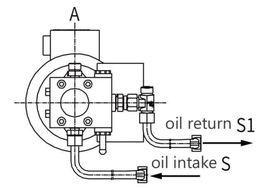

Model	V	X	H2	P	R	L	H1	B	C	K1	K	O	W1	W	I	n*d	A	PIPE	S1	S	H
ES70GGE	938	335	250	144	265	383	455	150	Φ219	220	280	110	320	320	165	4-Φ18	Φ240	DN40	G3/8"	G3/8"	610
ES100GGE	938	335	250	144	265	383	455	150	Φ219	220	280	110	320	320	165	4-Φ18	Φ240	DN40	G3/8"	G3/8"	610
ES150GGE	1472	540	325	190	443	465	623	200	Φ281	340	340	170	425	400	200	4-Φ18	Φ302	DN50	G3/4"	G3/4"	848
ES200GGE	1472	540	325	190	443	465	623	200	Φ281	340	340	170	425	400	200	4-Φ18	Φ302	DN50	G3/4"	G3/4"	848
ES250GGE	1617	575	370	225	482	594	715	200	Φ346	400	400	170	425	400	200	4-Φ18	Φ366	DN65	G3/4"	G3/4"	970
ES300GGE	1617	575	370	225	482	594	715	200	Φ346	400	400	190	490	470	235	4-Φ18	Φ366	DN65	G3/4"	G3/4"	970
ES500GGE	1829	575	370	225	553	735	913	200	Φ346	440	440	220	500	500	250	4-Φ18	Φ366	DN80	G3/4"	G3/4"	1163
ES600GGE	1571	500	385	230	640	640	970	200	Φ369	506	506	252	582	582	292	4-Φ22	Φ390	DN80	G1"	G1"	1260
ES800GGE	1611	515	425	230	641	636	1001	200	Φ455	506	506	252	582	582	292	4-Φ22	Φ474	DN100	G1"	G1"	1291
ES900GGE	1611	515	425	230	641	636	1001	200	Φ455	506	506	252	582	582	292	4-Φ22	Φ474	DN100	G1 "	G1"	1291
ES1000GGE	1880	600	505	300	598	801	1173	200	Φ495	320	320	660	750	750	660	8-Φ20	Φ540	DN125	G1"	G1"	1548
ES1500GGE	1880	600	505	300	598	801	1173	200	Φ505	320	320	660	750	750	660	8-Φ20	Φ540	DN125	G1"	G1"	1548

*Dimensions are available in both standard and extended sizes. The dimensions shown in the picture are for reference only. EBICO reserves the right to modify them without prior notice to the customer.